JEN–JAY, INC.

Addendum to Westcott Shores Joint-Use Dock Application

NWS 2018-274 Westcott Shores Community Dock
26 September 2018

This document is to accompany the ACOE application for a new joint-use dock located in Westcott Bay, on San Juan Island. Information in this addendum will serve to update the original application submitted for this project.

The size of the float structure has been modified to reduce mitigation debt associated with the proposed overwater structure. Additionally, a number of mitigation actions will be implemented prior to or concurrent with construction of the new dock system:

1) Float size has been modified to 8’ in width and 60’ in length, with a ramp landing float measuring 6’ in width by 10’ in length. Updated construction plans are included in Appendices 1-10.
2) A derelict float located across Westcott Bay on the shore of English Camp property is proposed for removal. The 8’ wide by 18’ long (144 square feet) solidly decked float is currently resting on the seabed and is no longer useful. The float will be removed and disposed of at an approved upland facility. Appendices 11 and 12 show the approximate location and an image of the float as described.
3) The entirety of Westcott Bay is documented as Pacific herring spawning habitat. In addition, some areas of Westcott Bay are known for surf smelt spawning. A small depression in the shoreline at the applicant property is proposed for conversion to potential forage fish habitat. This depression is roughly 35’ wide by 55’ long when measured between the existing rock banks on either side, and from MHW to 0’ MLLW. Approximately 1925 square feet of beach nourishment is proposed for placement in this depression. See imagery in Appendixes 13-15 for shape and size of the proposed nourishment area.
4) A mitigation planting plan has been proposed for approximately 3400 square feet of shoreline associated with the applicant properties. Planting is proposed for areas within 50’ of the high tide line and will include the planting of various species of native woody vegetation. Vegetation will be monitored for 5 years, ensuring 100% survival of plants in the first two years, and 80% survival for the final three. Plants will be protected from herbivory. Any plants that expire will be replaced prior to the following year’s monitoring survey. The associated mitigation planting plan, native plant list, and approximate planting areas are included in Appendices 16-18.

An updated RGP-6, Appendix B calculator is included, which details the mitigation credits associated with the updated dock structure, and above mitigation activities. Questions regarding mitigation actions associated with this project should be directed to:

David Dickhaus
(907) 227-7422
dickhaus@gci.net

or

Beth Tate
(360) 376-4664
beth@jenjayinc.com

PROJECT DESIGNED BY:
Waterfront Construction Inc.

THIS DOCUMENT IS **PROPRIETARY** PROPERTY OF WATERFRONT CONSTRUCTION INC., AND IS NOT TO BE USED, IN WHOLE OR IN PART, FOR ANY OTHER PROJECT WITHOUT THE WRITTEN AUTHORIZATION OF WATERFRONT CONSTRUCTION INC.

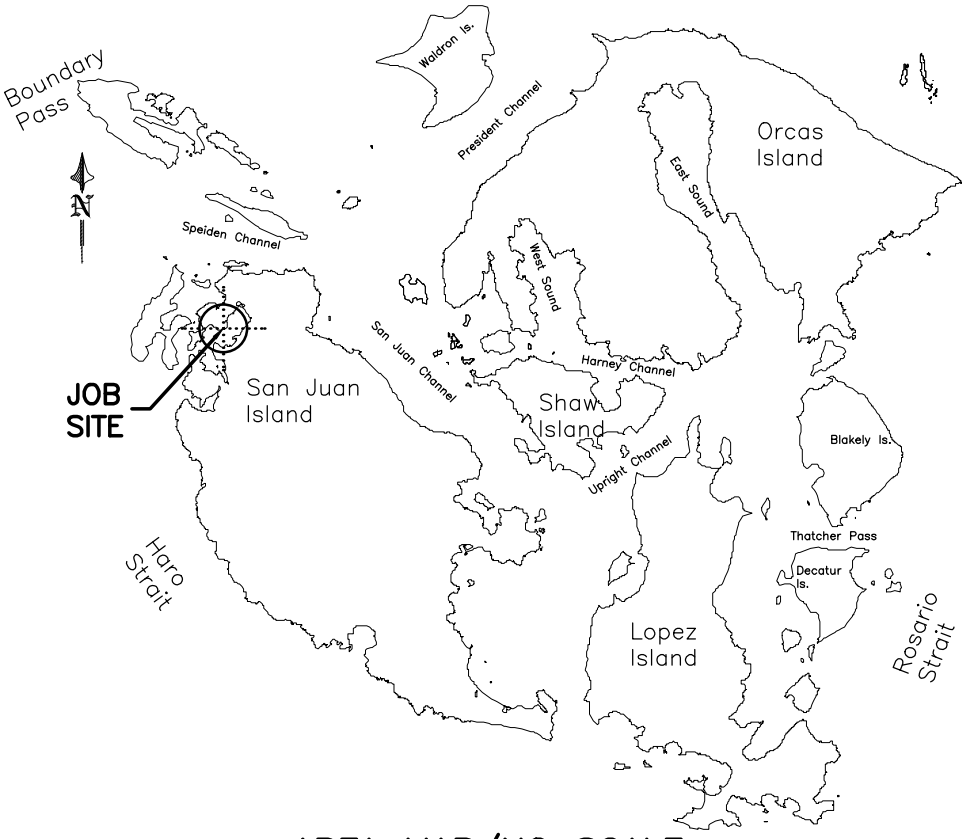

AREA MAP/NO SCALE

VICINITY MAP/NO SCALE

LEGAL DESCRIPTIONS OF JOINT USERS

A) ROY ROBINSON
NO SITE ADDRESS
TAXLOT #462341011000

B) LEONIE GRISWOLD
NO SITE ADDRESS
TAXLOT #462341001000

C) DAVID DICKHAUS
59 WILDWOOD LANE
1/4 SEC: SEC 23, T 36N, R 4W
TAXLOT #: 462341003000
LAT: 48.5993130 (48° 35' 57.53'' N)
LONG: −123.1514770 (123° 9' 5.32'' W)

LOT 2A – ALTERATION TO SHORT PLATS OF WESTCOTT SHORES 2 & WESTCOTT SHORES 3 TGW UND INT IN COMMON AREA 2 Sec 23, T 36N, R 4W

D) WARREN APPLETON
63 WILDWOOD LANE
1/4 SEC: SEC 23, T 36N, R 4W
TAXLOT #: 462341009000
LAT: 48.5995130 (48° 35' 58.25'' N)
LONG: −123.1534150 (123° 9' 12.29'' W)

WESTCOTT SHORES LOT 1 SHORT PLAT – LT 1B TGW INT IN COMM TDS & 41010 SEC 23, T 36N, R 4W

E) ROY ROBINSON
57 WILDWOOD LANE
TAXLOT #: 462341007000

REVISED FLOAT TO REDUCE SQUARE FOOTAGE

REVISED 8-29-18

ADJACENT OWNERS:

1. LEONIE BRADLEY GRISWOLD TTEE
977 WHITE POINT ROAD
FRIDAY HARBOR, WA. 98250

2. WOOD FAMILY TRUST HAROLD R & SCARLETT D WOOD TTEES
207A NO CLOVERDALE BL #197
CLOVERDALE CA 95425-3318

PROJECT NAME: WESTCOTT SHORES COMMUNITY PIER
DATUM: MLLW = 0.00'
REFERENCE #:
SITE LOCATION ADDRESS:
59 & 63 WILDWOOD LANE
FRIDAY HARBOR, WA. 98250
DWG#: 17-37057-A1-1

PROPOSED: INSTALL JOINT-USE PIER, RAMP & FLOAT
PURPOSE: PROVIDE JOINT-USE BOAT MOORAGE
NEAR/AT: FRIDAY HARBOR | IN: WESTCOTT BAY
COUNTY: SAN JUAN | STATE: WASHINGTON
APPL BY: WESTCOTT SHORES COMMUNITY c/o DAVID DICKHAUS
SHEET: 1 OF: 10 | DATE: 4-6-18

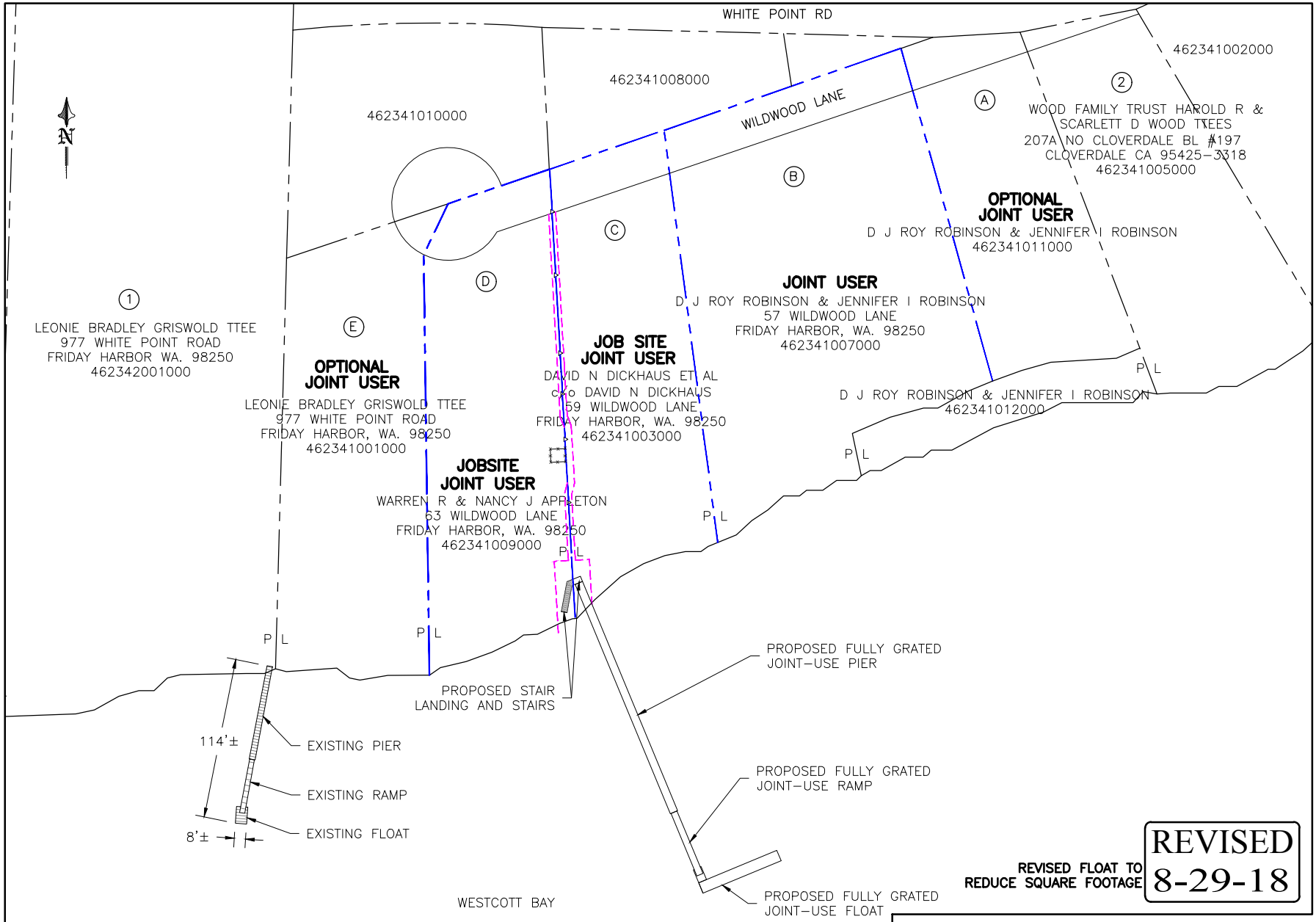

REVISED FLOAT TO REDUCE SQUARE FOOTAGE

REVISED
8-29-18

SITE PLAN

100' 50' 20' 0' 100'

SCALE: 1"=100'

REFERENCE #:	
APPLICANT: WESTCOTT SHORES COMMUNITY c/o DAVID DICKHAUS	
PROPOSED: INSTALL JOINT-USE PIER, RAMP & FLOAT	
SHEET: 2 OF: 10	NEAR/AT: FRIDAY HARBOR
DATE: 4-6-18	DWG#: 17-37057-A2-1

PROJECT DESIGNED BY:
Waterfront Construction Inc.
THIS DOCUMENT IS **PROPRIETARY** PROPERTY OF WATERFRONT CONSTRUCTION INC., AND IS NOT TO BE USED, IN WHOLE OR IN PART, FOR ANY OTHER PROJECT WITHOUT THE WRITTEN AUTHORIZATION OF WATERFRONT CONSTRUCTION INC.

PROJECT DESIGNED BY:
Waterfront Construction Inc.

THIS DOCUMENT IS **PROPRIETARY** PROPERTY OF WATERFRONT CONSTRUCTION INC., AND IS NOT TO BE USED, IN WHOLE OR IN PART, FOR ANY OTHER PROJECT WITHOUT THE WRITTEN AUTHORIZATION OF WATERFRONT CONSTRUCTION INC.

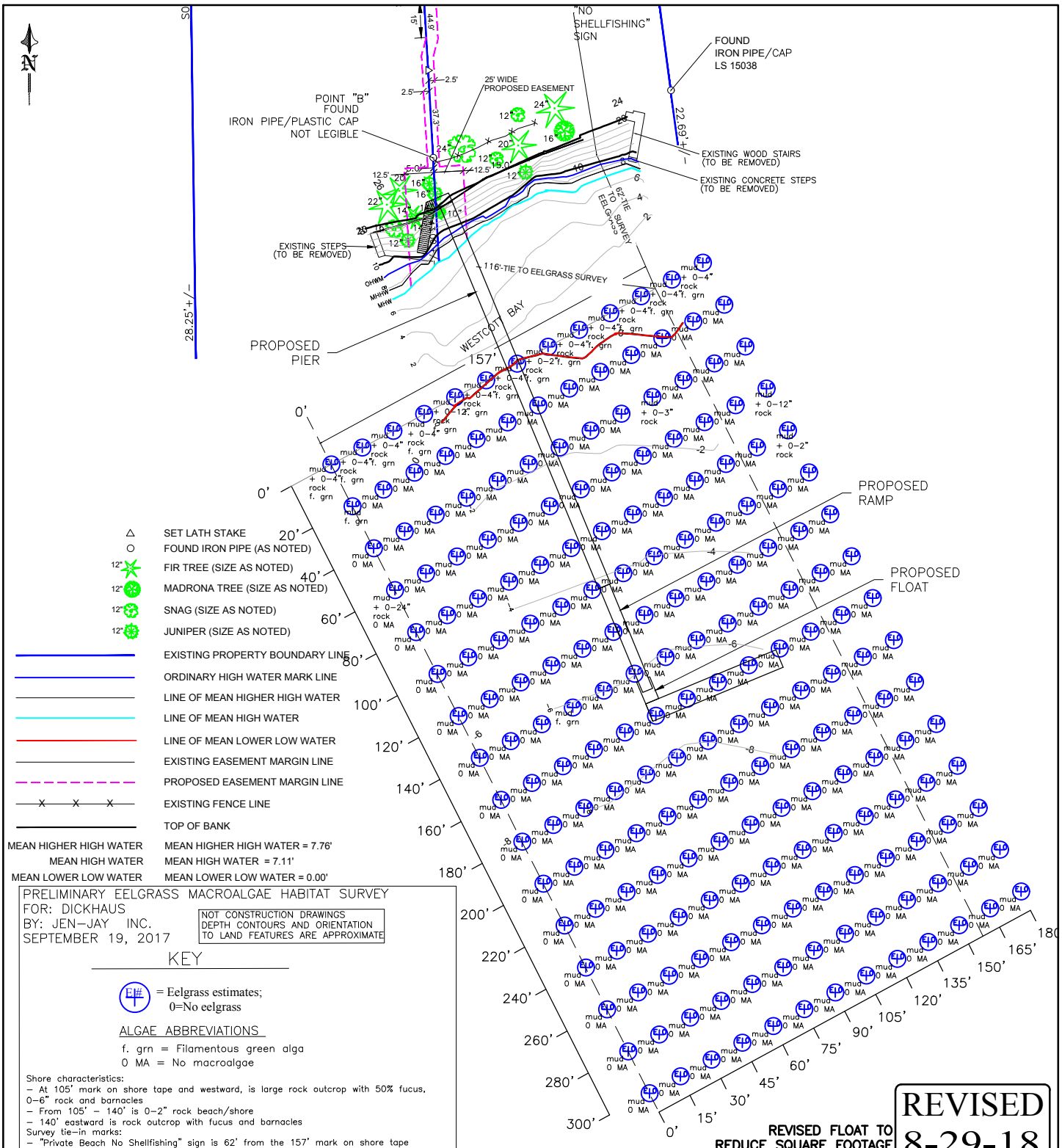

PRELIMINARY EELGRASS MACROALGAE HABITAT SURVEY
FOR: DICKHAUS
BY: JEN–JAY INC.
SEPTEMBER 19, 2017

NOT CONSTRUCTION DRAWINGS
DEPTH CONTOURS AND ORIENTATION TO LAND FEATURES ARE APPROXIMATE

KEY

EL# = Eelgrass estimates; 0=No eelgrass

ALGAE ABBREVIATIONS

f. grn = Filamentous green alga
0 MA = No macroalgae

Shore characteristics:
- At 105' mark on shore tape and westward, is large rock outcrop with 50% fucus, 0–6" rock and barnacles
- From 105' – 140' is 0–2" rock beach/shore
- 140' eastward is rock outcrop with fucus and barnacles

Survey tie–in marks:
- "Private Beach No Shellfishing" sign is 62' from the 157' mark on shore tape
* Sea asparagus is 54' from 157' mark on shore tape (in same line as to sign)
- East bottom corner of Appleton concrete steps is 116' from 157' mark on shore tape
* Sea asparagus is 87' from 157' mark on shore tape (in same line as to steps)

REVISED FLOAT TO REDUCE SQUARE FOOTAGE

REVISED 8-29-18

DIVE SURVEY

60' 45' 30' 15' 0' 60'

SCALE: 1"=60'

REFERENCE #:	
APPLICANT: WESTCOTT SHORES COMMUNITY c/o DAVID DICKHAUS	
PROPOSED: INSTALL JOINT–USE PIER, RAMP & FLOAT	
SHEET: 3 OF: 10	NEAR/AT: FRIDAY HARBOR
DATE: 4–6–18	DWG#: 17–37057–A3–1

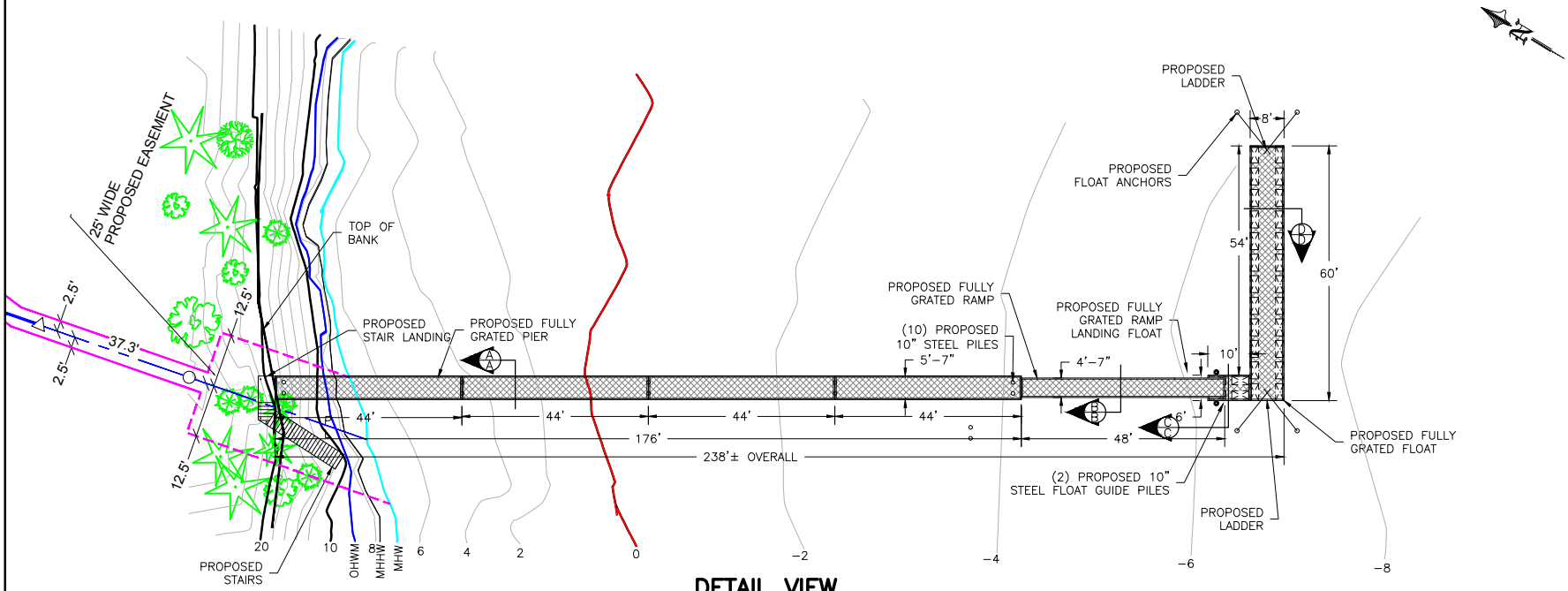

DETAIL VIEW

SCALE: 1"=40'

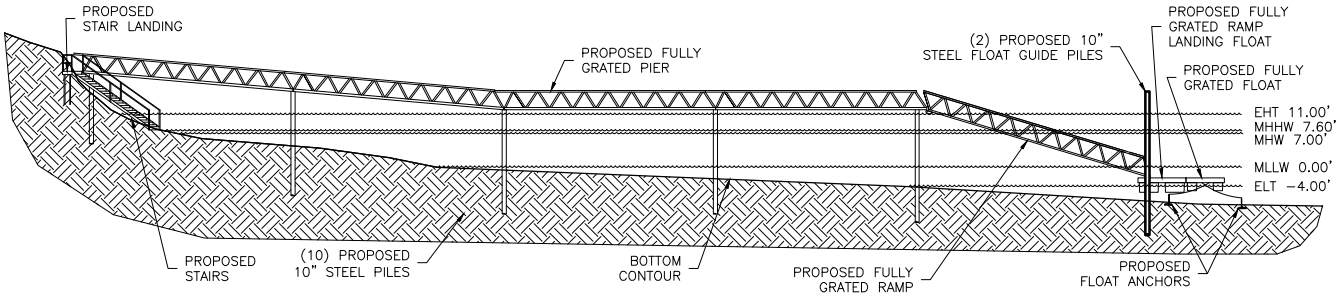

ELEVATION VIEW

40' 30' 20' 10' 0' 40'

SCALE: 1"=40'

PROPOSED PIER	982 S/F
PROPOSED RAMP	220 S/F
PROPOSED FLOAT	540 S/F
LESS RAMP OVERLAP	-18.43 S/F
TOTAL:	1723.57 S/F

REVISED FLOAT TO REDUCE SQUARE FOOTAGE

REVISED 8-29-18

REFERENCE #:	
APPLICANT: WESTCOTT SHORES COMMUNITY c/o DAVID DICKHAUS	
PROPOSED: INSTALL JOINT-USE PIER, RAMP & FLOAT	
SHEET: 4 OF: 10	NEAR/AT: FRIDAY HARBOR
DATE: 4-6-18	DWG#: 17-37057-A4-1

PROJECT DESIGNED BY:
Waterfront Construction Inc.

THIS DOCUMENT IS **PROPRIETARY** PROPERTY OF WATERFRONT CONSTRUCTION INC., AND IS NOT TO BE USED, IN WHOLE OR IN PART, FOR ANY OTHER PROJECT WITHOUT THE WRITTEN AUTHORIZATION OF WATERFRONT CONSTRUCTION INC.

PROJECT DESIGNED BY:
Waterfront Construction Inc.
THIS DOCUMENT IS **PROPRIETARY** PROPERTY OF WATERFRONT CONSTRUCTION INC., AND IS NOT TO BE USED, IN WHOLE OR IN PART, FOR ANY OTHER PROJECT WITHOUT THE WRITTEN AUTHORIZATION OF WATERFRONT CONSTRUCTION INC.

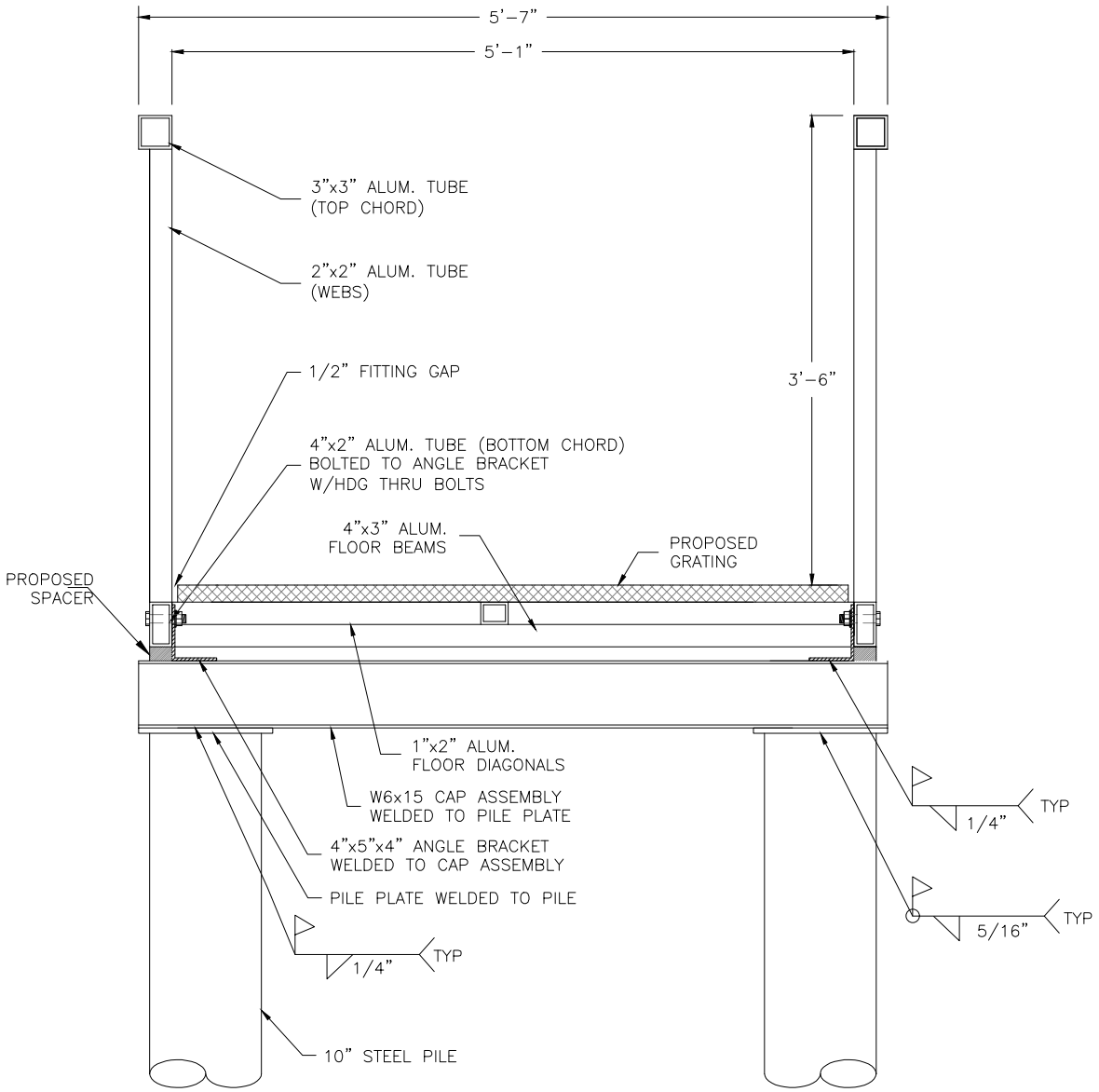

PIER SECTION VIEW A–A

12" 6" 3" 0' 1'

SCALE: 3/4"=1'

REVISED FLOAT TO REDUCE SQUARE FOOTAGE

REVISED 8-29-18

PIER MATERIAL LIST

PART	SPECS	TREATMENT
PILING	10" STD WALL	EPOXY COATED
GRATING	MOLDED PLASTIC	NONE
CAP	W6x15 STEEL	HDG.
PIER TUBING	ALUMINUM	NONE
HARDWARE	STEEL	STAINLESS OR HDG.

REFERENCE #:	
APPLICANT: WESTCOTT SHORES COMMUNITY c/o DAVID DICKHAUS	
PROPOSED: INSTALL JOINT–USE PIER, RAMP & FLOAT	
SHEET: 5 OF: 10	NEAR/AT: FRIDAY HARBOR
DATE: 4–6–18	DWG#: 17–37057–A5–1

PROJECT DESIGNED BY:
Waterfront Construction Inc.
THIS DOCUMENT IS **PROPRIETARY** PROPERTY OF WATERFRONT CONSTRUCTION INC., AND IS NOT TO BE USED, IN WHOLE OR IN PART, FOR ANY OTHER PROJECT WITHOUT THE WRITTEN AUTHORIZATION OF WATERFRONT CONSTRUCTION INC.

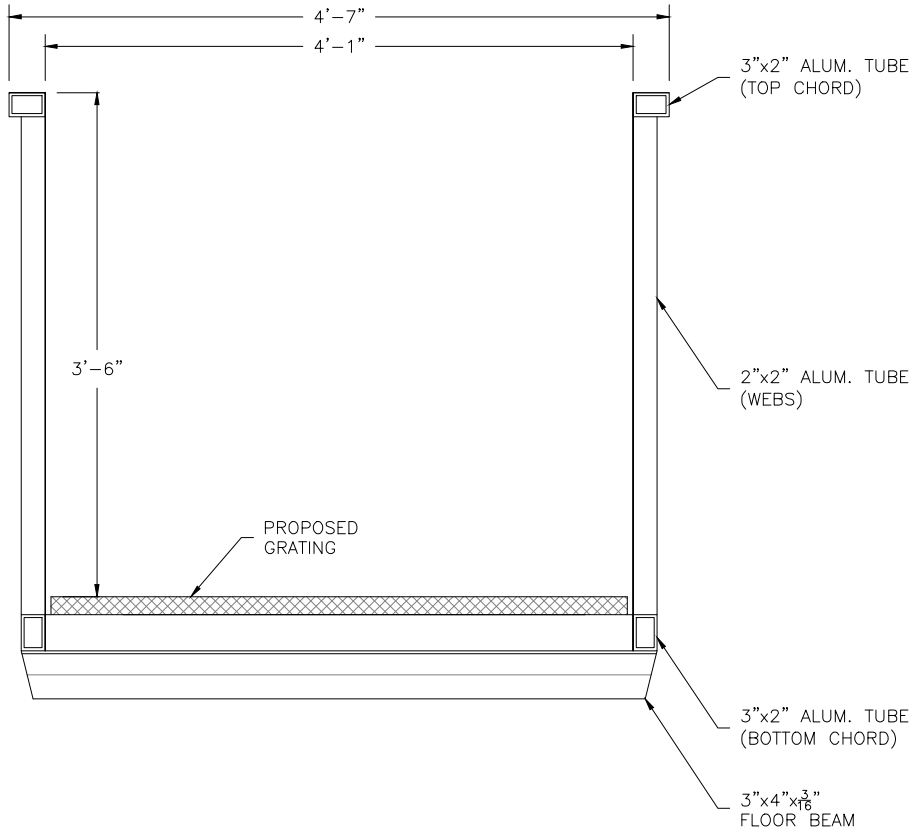

RAMP SECTION B-B

12" 6" 3" 0' 1'

SCALE: 3/4"=1'

REVISED FLOAT TO REDUCE SQUARE FOOTAGE

REVISED 8-29-18

RAMP MATERIAL LIST

PART	SPECS	TREATMENT
GRATING	FIBERGLASS	NONE
RAMP TUBING	ALUMINUM	NONE
HARDWARE	STEEL	STAINLESS OR HDG.

REFERENCE #:	
APPLICANT: WESTCOTT SHORES COMMUNITY c/o DAVID DICKHAUS	
PROPOSED: INSTALL JOINT-USE PIER, RAMP & FLOAT	
SHEET: 6 OF: 10	NEAR/AT: FRIDAY HARBOR
DATE: 4-6-18	DWG#: 17-37057-A6-1

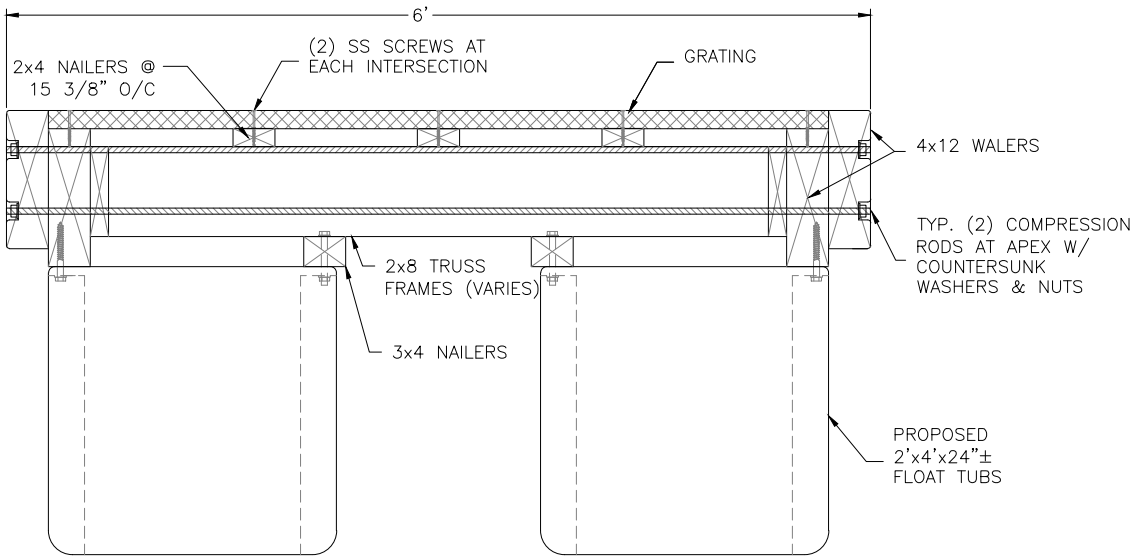

FLOAT SECTION C–C

12" 6" 3" 0' 1'

SCALE: 3/4"=1'

FLOAT MATERIAL SPECIFICATIONS

PART	SPECIFICATIONS	TREATMENT
PILING	10" STD WALL STEEL PIPE	EPOXY COATED
FLOAT NAILERS	2x4 & 3x4 DF #2 OR BTR	ACZA
FLOAT RIM JOIST	2x8 DF #2 OR BTR	ACZA
FLOAT JOIST	2x8 DF #2 OR BTR	ACZA
FLOAT STRINGERS	4x12 DF # 2 OR BTR	ACZA
FLOAT GRATING	MOLDED PLASTIC	NONE
HARDWARE	STEEL	STAINLESS OR HDG

REVISED FLOAT TO REDUCE SQUARE FOOTAGE

REVISED
8-29-18

REFERENCE #:	
APPLICANT: WESTCOTT SHORES COMMUNITY c/o DAVID DICKHAUS	
PROPOSED: INSTALL JOINT–USE PIER, RAMP & FLOAT	
SHEET: 7 OF: 10	NEAR/AT: FRIDAY HARBOR
DATE: 4–6–18	DWG#: 17–37057–A7–1

PROJECT DESIGNED BY:
Waterfront Construction Inc.
THIS DOCUMENT IS **PROPRIETARY** PROPERTY OF WATERFRONT CONSTRUCTION INC. AND IS NOT TO BE USED, IN WHOLE OR IN PART, FOR ANY OTHER PROJECT WITHOUT THE WRITTEN AUTHORIZATION OF WATERFRONT CONSTRUCTION INC.

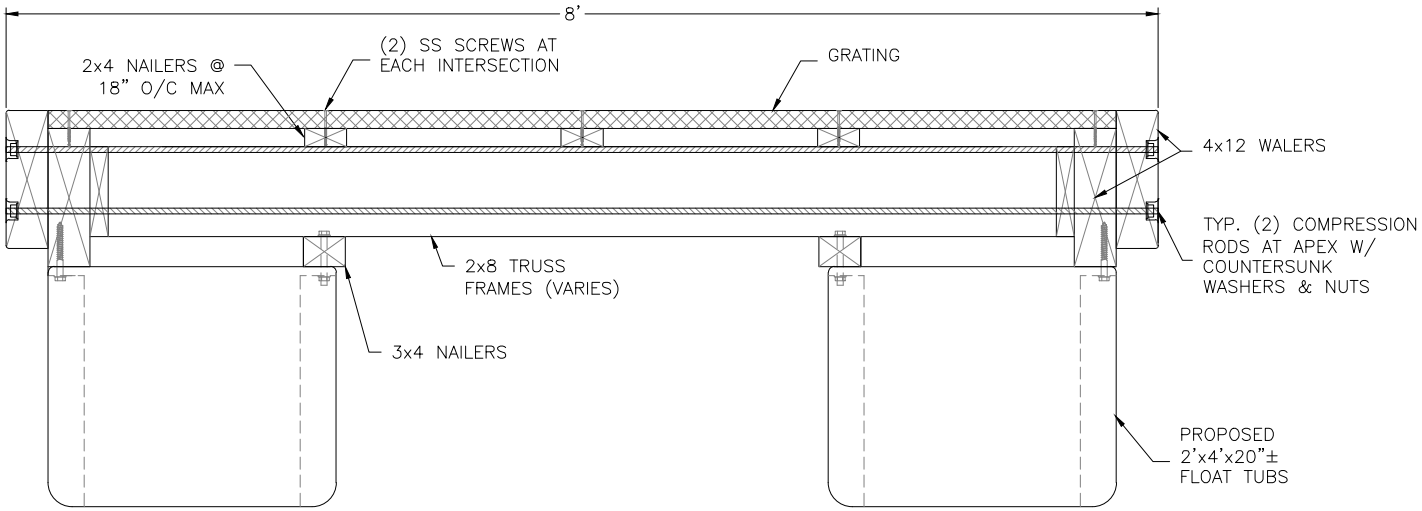

FLOAT SECTION D–D

12" 6" 3" 0' 1'

SCALE: 3/4"=1'

FLOAT MATERIAL SPECIFICATIONS

PART	SPECIFICATIONS	TREATMENT
PILING	10" STD WALL STEEL PIPE	EPOXY COATED
FLOAT NAILERS	2x4 & 3x4 DF #2 OR BTR	ACZA
FLOAT RIM JOIST	2x8 DF #2 OR BTR	ACZA
FLOAT JOIST	2x8 DF #2 OR BTR	ACZA
FLOAT STRINGERS	4x12 DF # 2 OR BTR	ACZA
FLOAT GRATING	MOLDED PLASTIC	NONE
HARDWARE	STEEL	STAINLESS OR HDG

REVISED FLOAT TO REDUCE SQUARE FOOTAGE

REVISED
8-29-18

REFERENCE #:	
APPLICANT: WESTCOTT SHORES COMMUNITY c/o DAVID DICKHAUS	
PROPOSED: INSTALL JOINT–USE PIER, RAMP & FLOAT	
SHEET: 8 OF: 10	NEAR/AT: FRIDAY HARBOR
DATE: 4–6–18	DWG#: 17–37057–A8–1

PROJECT DESIGNED BY:
Waterfront Construction Inc.
THIS DOCUMENT IS **PROPRIETARY** PROPERTY OF WATERFRONT CONSTRUCTION INC., AND IS NOT TO BE USED, IN WHOLE OR IN PART, FOR ANY OTHER PROJECT WITHOUT THE WRITTEN AUTHORIZATION OF WATERFRONT CONSTRUCTION INC.

PROJECT DESIGNED BY:
Waterfront Construction Inc.
THIS DOCUMENT IS **PROPRIETARY** PROPERTY OF WATERFRONT CONSTRUCTION INC., AND IS NOT TO BE USED, IN WHOLE OR IN PART, FOR ANY OTHER PROJECT WITHOUT THE WRITTEN AUTHORIZATION OF WATERFRONT CONSTRUCTION INC.

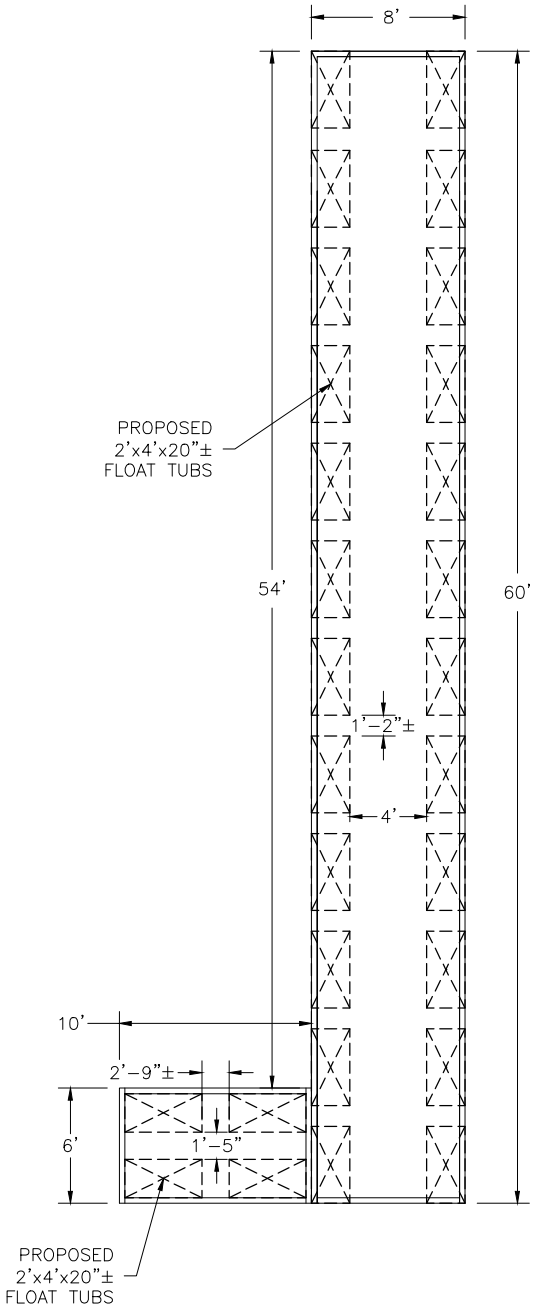

FLOAT TUB LAYOUT

10' 5' 2' 0 10'

SCALE: 1"=10'

REVISED FLOAT TO REDUCE SQUARE FOOTAGE

REVISED 8-29-18

OVERALL GRATING = 491.67± S/F
TOTAL FUNCTIONAL GRATING = 297.67± S/F

REFERENCE #:	
APPLICANT: WESTCOTT SHORES COMMUNITY c/o DAVID DICKHAUS	
PROPOSED: INSTALL JOINT-USE PIER, RAMP & FLOAT	
SHEET: 9 OF: 10	NEAR/AT: FRIDAY HARBOR
DATE: 4-6-18	DWG#: 17-37057-A9-1

PROJECT DESIGNED BY:
Waterfront Construction Inc.
THIS DOCUMENT IS **PROPRIETARY** PROPERTY OF WATERFRONT CONSTRUCTION INC., AND IS NOT TO BE USED, IN WHOLE OR IN PART, FOR ANY OTHER PROJECT WITHOUT THE WRITTEN AUTHORIZATION OF WATERFRONT CONSTRUCTION INC.

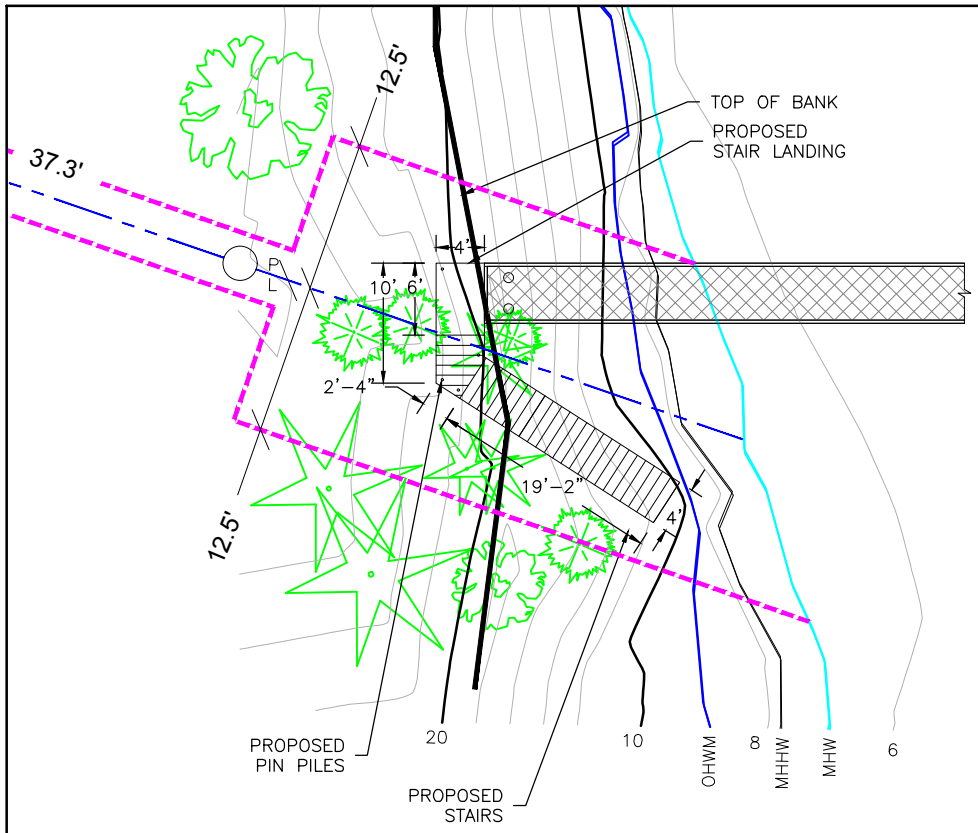

PROPOSED STAIR DETAIL

SCALE: 1/16"=1'

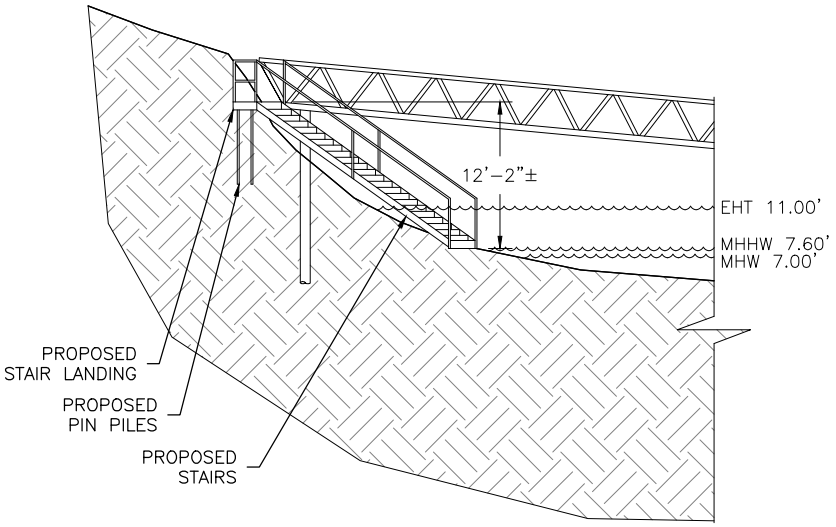

PROPOSED STAIR ELEVATION

16' 8' 4' 0' 16'

SCALE: 1/16"=1'

REVISED FLOAT TO REDUCE SQUARE FOOTAGE

REVISED 8-29-18

REFERENCE #:	
APPLICANT: WESTCOTT SHORES COMMUNITY c/o DAVID DICKHAUS	
PROPOSED: INSTALL JOINT-USE PIER, RAMP & FLOAT	
SHEET: 10 OF: 10	NEAR/AT: FRIDAY HARBOR
DATE: 4-6-18	DWG#: 17-37057-A10-1

Google Maps

1

Imagery ©2018 CNES / Airbus, DigitalGlobe, U.S. Geological Survey, USDA Farm Service Agency, Map data ©2018 Google 1000 ft

Derelict Dock (Float) Location

Appendix 11

Google Maps

Imagery ©2018 U.S. Geological Survey, Map data ©2018 Google 20 ft

Beach Nourishment Location & Limits

Rock Outcropping Edges

Beach Nourshishment Limits

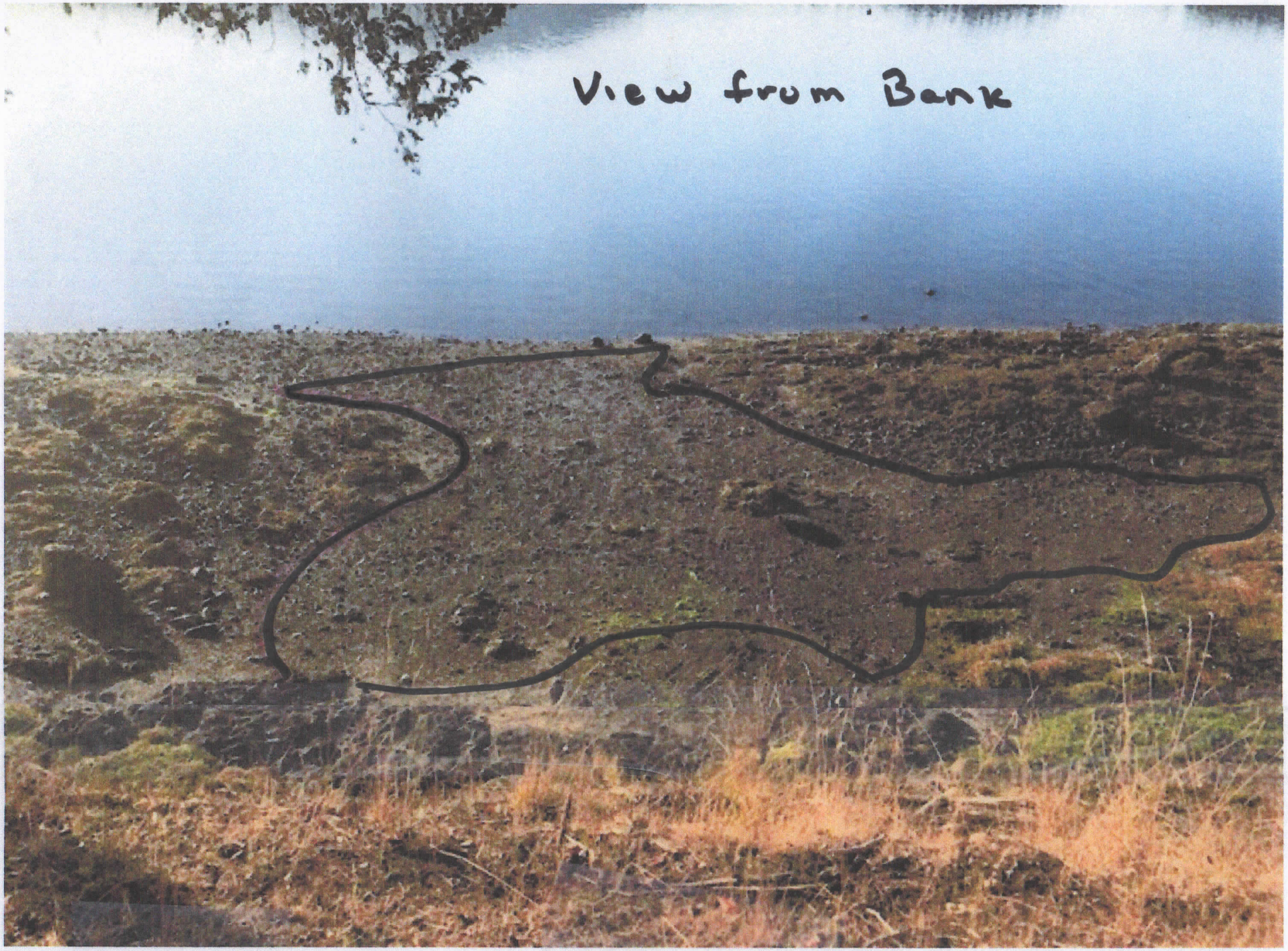

Nourisitment Limits

Appendix 14

Appendix 15

View from Water

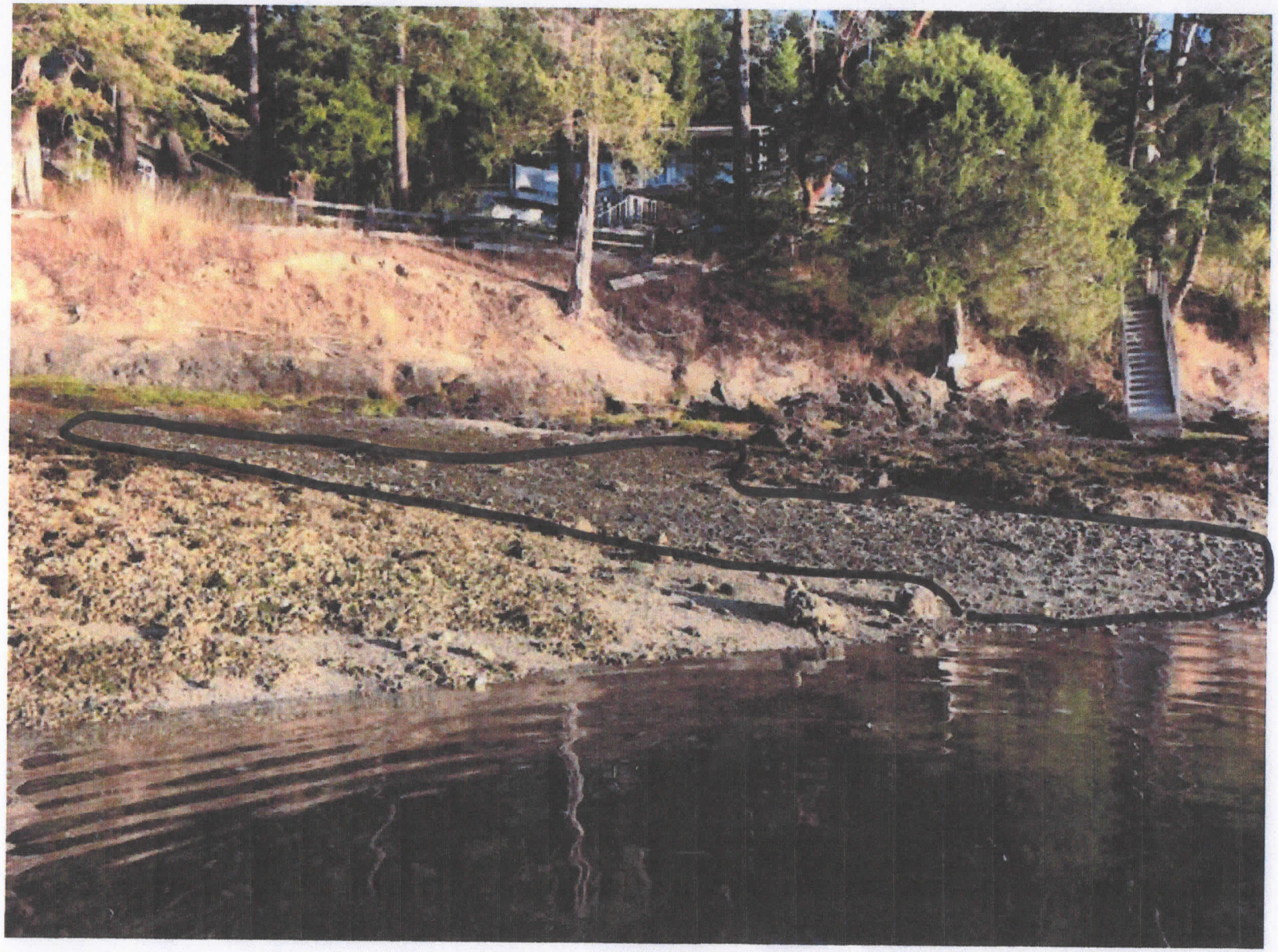

Nourishment Limits

Westcott Shores Joint Use Pier
Endangered Species Act (ESA) Mitigation Planting Plan
Corps Ref # NWS-2018-274
September 23, 2018

Proposed Project:

Project is located in Westcott Bay on San Juan Island. (Lat: 48.598376, Long: -123.152728) The project consists of a 176' * 5'7" Pier, 48' * 4'7" Ramp, 6' * 10' Landing float and a 60' * 8' Tie-up Float. The pier is supported by 10 each 10" piles, the landing float is anchored with two 10" guide piles and the Tie-up float is held in position by 4 each submerged anchors.

As a conservation measure to address impacts to ESA listed species and critical habitat, the following shoreline planting plan will be implemented:

Planting Area:

The proposed planting locations are located in the "Fully Functional Shoreline Zone" and generally occur in areas of sparse existing vegetation. Attached is a drawing (Mitigation Planting Locations) that shows these various locations.

Plant List:

Attached is a planting list that identifies the various plants proposed for our mitigation and the different properties they are located on. (Westcott Shores Mitigation Planting List)

Site Preparation and Planting:

Each plant location will be located to least interfere with existing established plants. A hole will be manually dug three times the size of the plants root-ball. If necessary the existing soil will be amended before it is used as backfill for the new plant.

Schedule:

Plants will be installed between October 2019 and March 2020.

Maintenance and Monitoring:

All the plantings will be located on the properties of the Appleton, Dickhaus and Robinson parties. (63, 59 & 57 Wildwood Lane) Each party will be responsible for the watering and maintenance of the new plants located on their property.

Monitoring will occur at the end of November for five years after the initial planting. 100% survival is required at the end of the first two years, 80% the following three years, plants will be replaced to meet these requirements.

Reporting:

After the initial planting, an as-built report will be provided to the Corps that documents the plants installed, the dates of their planting along with photos.

An annual monitoring report will be submitted at the end of each calendar year. This report will address the health and survival of the plantings, including pictures of the planted areas.

Applicant Name

David Dickhaus

9/26/2018
Date

Agent Name (optional)

Date

Plant List

Date prepared : September 17, 2018

Location	Name	Latin	quantity	Notes
63 Wildwood Lane	Oregon Grape	Mahonia aquafolium	7	
	Oceanspray	Holodiscus D.	5	
	Pacific Crabapple	Malus fusca	3	
	Serviceberry	Amelanchier A.	2	
			800 sqft	
59 Wildwood Lane	Oregon Grape	Mahonia aquafolium	15	
	Oceanspray	Holodiscus D.	5	
	Hardhack	Spirea douglasii	7	
	Pacific Crabapple	Malus fusca	3	
	Serviceberry	Amelanchier A.	3	
	Vine Maple	Acer circirnatum	3	
			1575 sqft	
57 Wildwood Lane	Oregon Grape	Mahonia aquafolium	10	
	Oceanspray	Holodiscus D.	3	
	Pacific Crabapple	Malus fusca	1	
	Serviceberry	Amelanchier A.	3	
	Vine Maple	Acer circirnatum	3	
			1025 sqft	

This is a conceptual plant list proposal for the waterfront mitigation work at Westcott Shores Properties on San Juan Island.

These plants have been selected from lists provided to best work in the areas designated for the required mitigation plantings.

Garden Artisan Landscapes

1311 Three Meadows Lane
Friday Harbor, WA 98250
Cell: 360 317 7587
wocka@gardenartnz.com
www.gardenartnz.com

Westcott Shores Community

63/59/57 Wildwood Lane

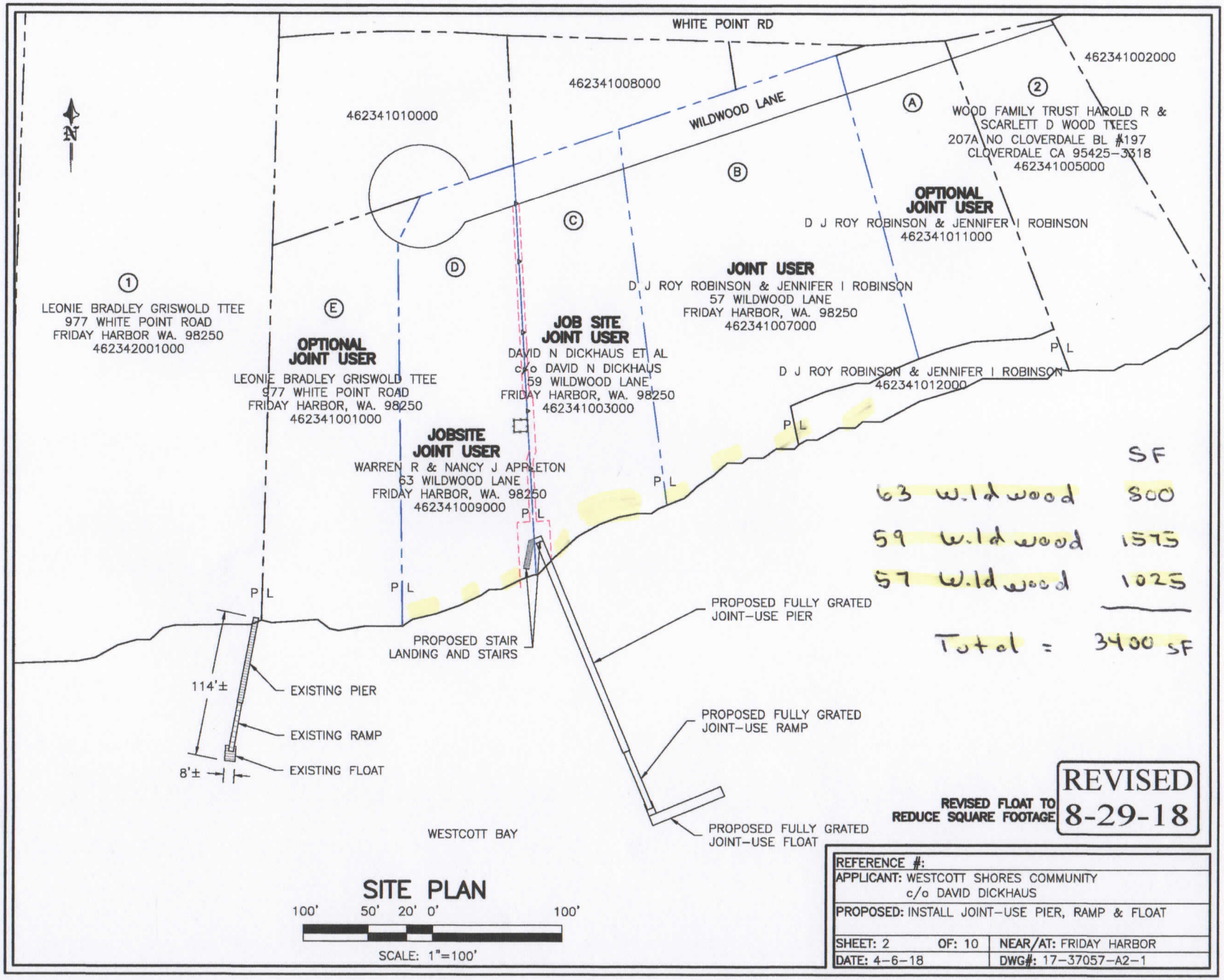

PROJECT DESIGNED BY:
Waterfront Construction Inc.

THIS DOCUMENT IS PROPRIETARY PROPERTY OF WATERFRONT CONSTRUCTION INC., AND IS NOT TO BE USED, IN WHOLE OR IN PART, FOR ANY OTHER PROJECT WITHOUT THE WRITTEN AUTHORIZATION OF WATERFRONT CONSTRUCTION INC.